Assessment Rubric for Communication	Level 4 Always	Level 3 Mostly	Level 2 Sometimes	Level 1 Rarely	R Remedial
Mathematical symbols, form and units are used correctly					
Written solutions and labels clearly explain and justify ideas					
Work is structured so it can be easily understood by reader					
Rounding is done properly as specified					

Assignment Mark	Comm. Mark
$\frac{\quad}{80} \times 80\%$	$\frac{\quad}{20} \times 20\%$
Overall Mark:	

2D Shapes Measurement Assignment

Name: _____

1. Taylor drew a model of a map of Saskatchewan in the shape of a trapezoid. The dimensions represented on the map are below. Calculate the area of Saskatchewan. (1 dp) [4]

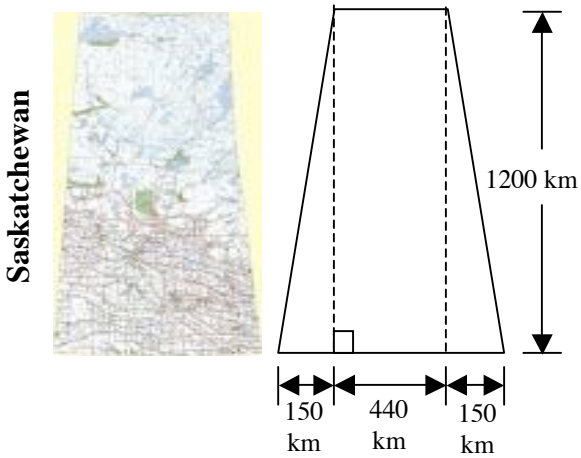

2. Find the **perimeter** AND **area** of each shape below (1 dp). [4 , 4]

a)

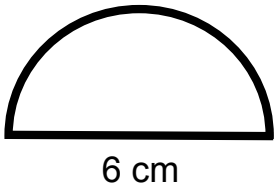

b)

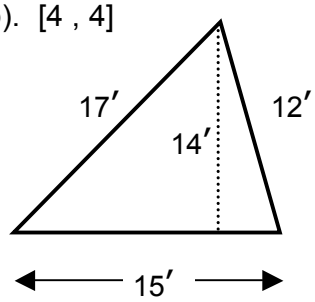

3. Luke designs a garden in the shape of a rectangle as shown below. The total area of the garden is 121 m^2. Find the value of ***x*** in Luke's diagram (2 dp). [4]

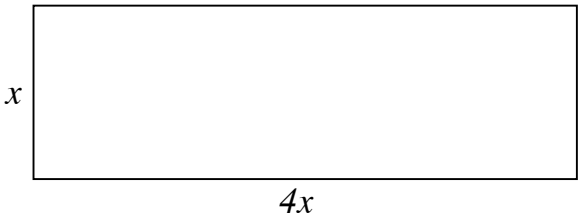

4. Fred has a lawn as shown in the diagram to the right.

a) Find the **area** of his lawn so he can lay grass seed (1 dp). [4]

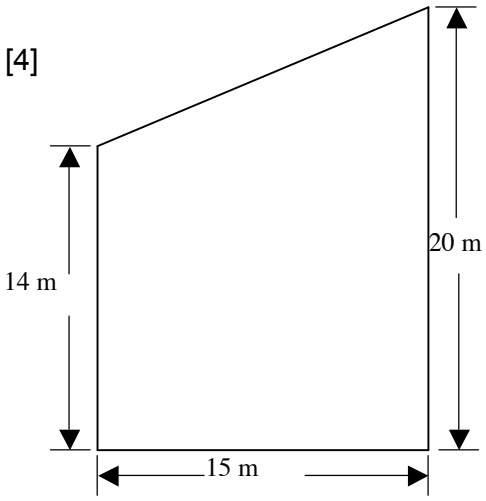

b) Determine how much **fencing** Fred needs to go completely around his lawn (1 dp). [4]

5. The dimensions of the side of a bridge are shown below. The arches are identical semicircles. Find the **lateral surface area** on the side of the bridge (1 dp). [4]

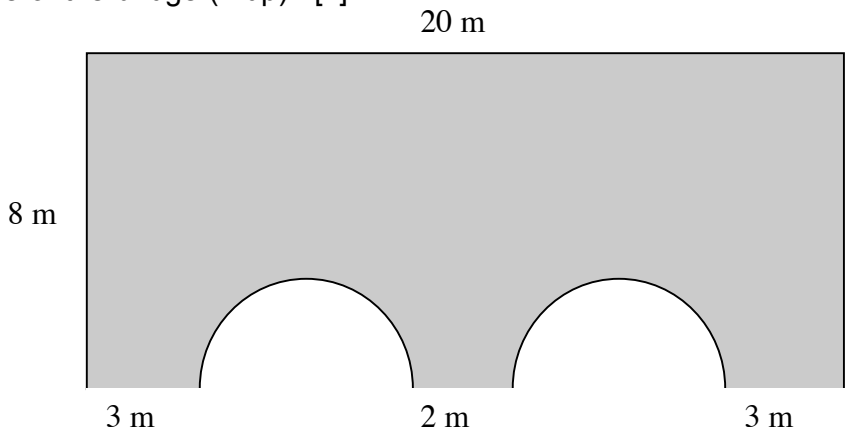

6. Savanah is designing a rectangular flag that consists of three coloured triangles. The picture below shows the colours of the triangles and the cost of each colour of material. Find the **total cost** of the material (round to nearest cent). [4]

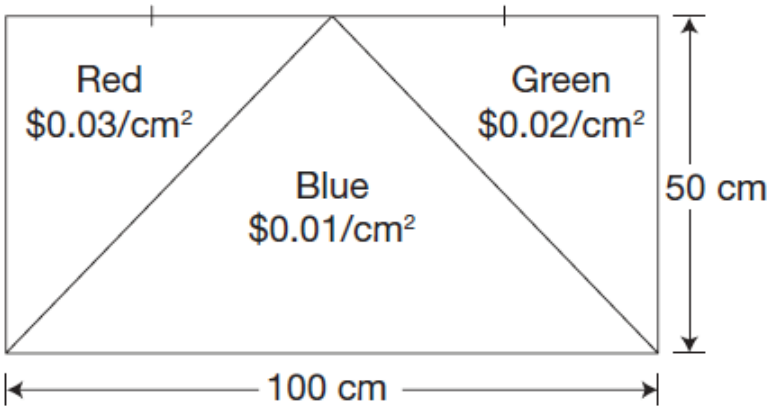

7. Bailey builds an ice rink as shown below.

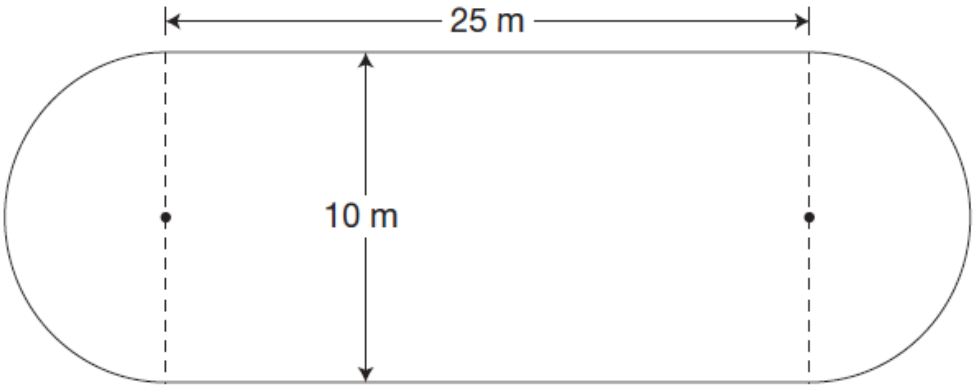

a) So that Bailey can order boards, determine the **perimeter** of the rink (1 dp). [4]

b) So Bailey can find how much ice is needed, determine the **surface area** of the rink (1 dp). [4]

8. Naomi builds a garden is in the shape of a rectangle and semicircle. Find the amount of **fencing** she needs to enclose the garden (1 dp). [4]

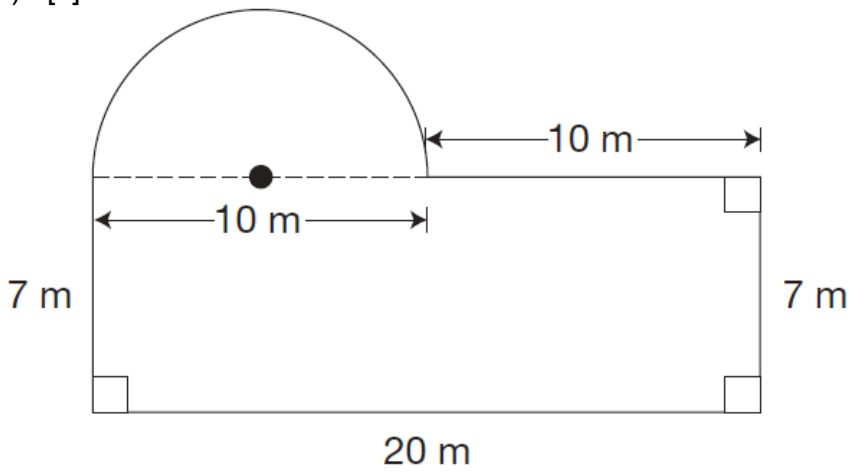

9. Aaron uses fencing to create a rectangular hockey rink. He uses the side of a barn as one of the sides of the enclosure. Aaron has 48 metres of boards to use for the three sides around the rink.

Find the set of **dimensions** that will create the largest hockey rink enclosure with the 48 m of fencing. Justify by showing your dimensions are larger than some other possibilities. [4]

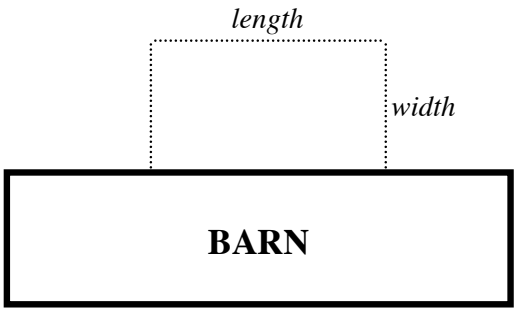

10. Nicholas has a square garden with an area of 45 m^2. He decreases the length of each side by 1.7 m to make a smaller garden. Find the **perimeter** of the smaller garden (1 dp). [4]

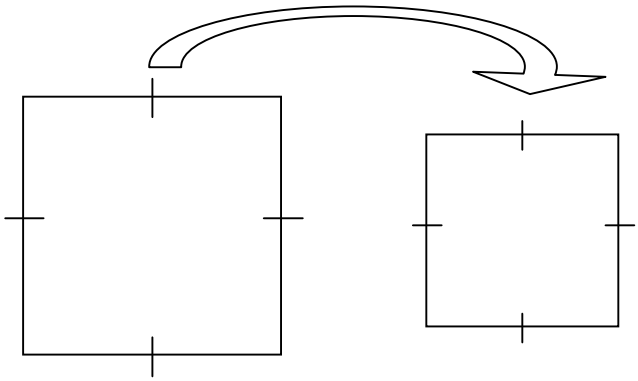

11. Sadie wants a rectangle with a perimeter of 50 cm and the largest possible area. State the **dimensions** and **area** of the rectangle satisfying her conditions. Show your work. [4]

12. Given the parallelogram below, what is the **perimeter** of WXYZ? (1 dp) [4]

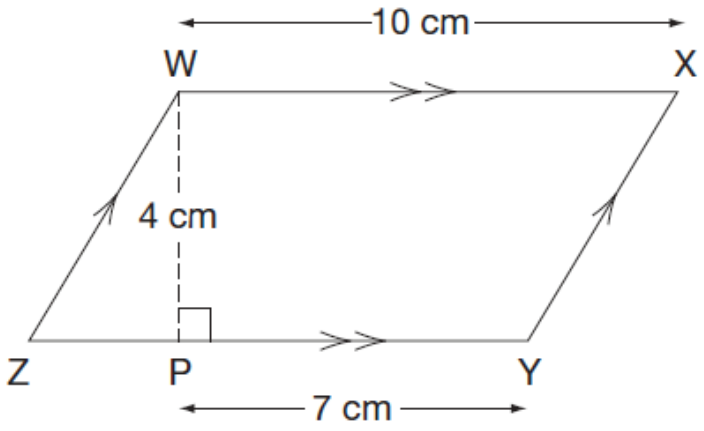

13. Aaden makes toy sail boats. Determine the **total area** of the shaded sails (2 dp). [4]

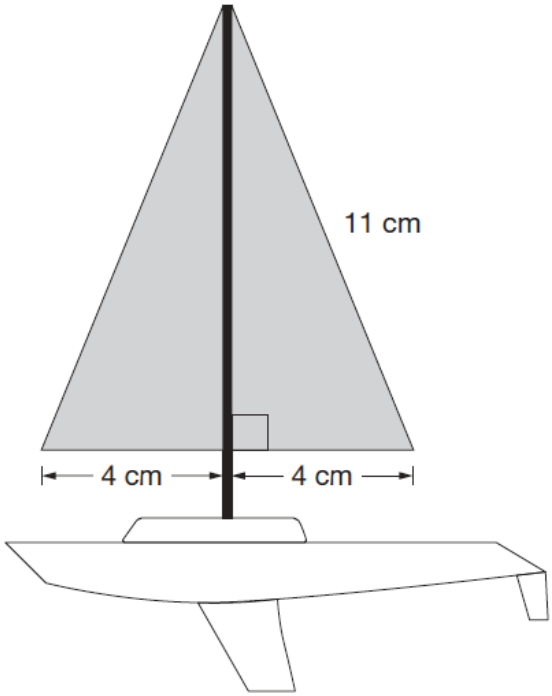

14. The semicircle in the diagram below has a radius of 4 cm. Find the **area** of the shaded region in the diagram (1 dp)? [4]

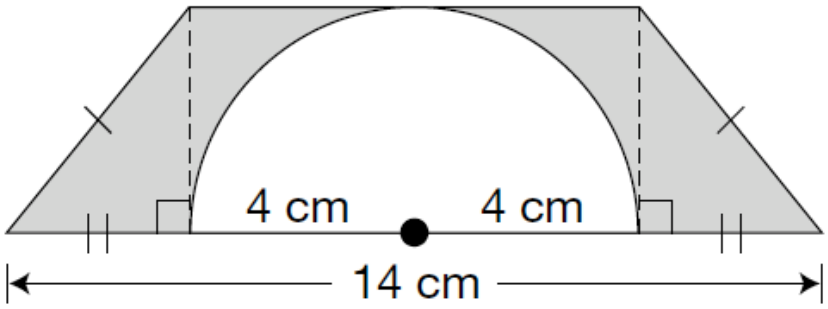

15. The distance Rick covers in 5 laps of a circular track is 400π metres. What is the **shortest distance** between Rick at any point on the track and the centre? (1 dp) [4]

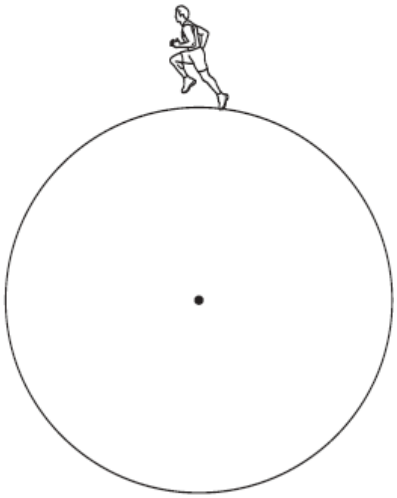

16. Ashley runs around the following track. How **many times** must she run around the track to run a total distance of 4 km? (1 dp) [4]

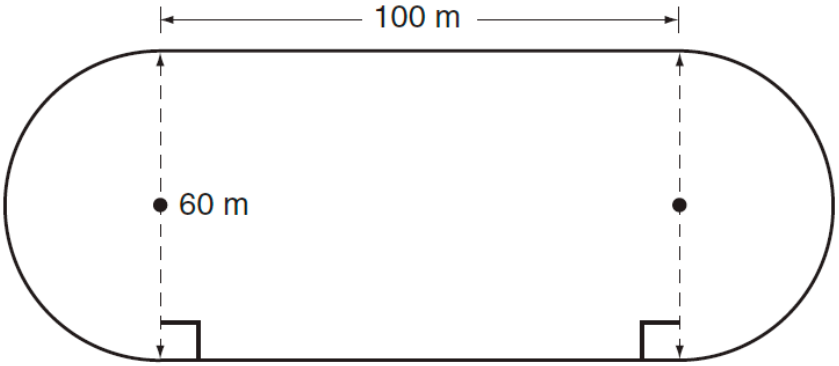

Hint:

1 km = 1000 m

17. A field in the shape of a trapezoid has a perimeter of 500 m. A fence is being built around the field based on the diagram below. Determine the **length of fencing** needed for each side of the field. (1 dp) [4]